:Fabbian
50 Via S. Brigida 31020 Castelminio di Resana Treviso
Italy Tel. +39 0423 4848 Fax +39 0423 484395
www.fabbian.com fabbian@fabbian.com

F45G04 OLYMPIC

I — AVVERTENZE

ATTENZIONE: LA SICUREZZA DELL'APPARECCHIO E' GARANTITA SOLO CON L'USI APPROPRIATO DELLE SEGUENTI ISTRUZIONI. CONSERVARLE CON CURA.

Prima di eseguire qualsiasi tipo di operazione togliere la tensione di rete
Per la pulizia dei vetri si raccomanda di non usare mai abrasivi o solventi
Fare attenzione a non superare il Max di watt indicati per l'apparecchio
L'apparecchio non può essere usato in ambienti umidi o all'esterno
Mai coprire l'apparecchio durante l'impiego.

Max. potenza lampada	56W-24Vdc
Attacco lampada	LED 2700K
Tipo lampada	
Apparecchio classe	I
Grado di protezione	IP40

GB — WARNING

ATTENTION: THE SAFETY OF THE APPLIANCE IS GUARANTEED ONLY IF IT IS PROPERLY USED, ACCORDING TO THE FOLLOWING INSTRUCTIONS, WHICH ARE TO BE KEPT.

Always disconnect the power supply before installing or performing any maintenance operations
For cleaning the glass do not use any abrasive or solvent materials
Make attention of not exceeding the maximum watt indicated on the appliance
The appliance may not be used in humid or external environments
Never cover the appliance while in function

Capacity of bulb	56W-24Vdc
Type of lampholder	LED 2700K
Type of bulb	
Appliance in class	I
Protection class	IP40

D — WICHTIGE HINWEISE

ACHTUNG: DIE SICHERHEIT DIESES BELEUCHTUNGSKÖRPERS WIRD NUR DURCH DIE KORREKTE ANWENDUNG DER NACHSTEHENDEN ANWEISUNGEN GEWÄHRLEISTET. DIESE ÜSSEN DAHER SORGFÄLTIG AUFBEWAHRT WERDEN.:

Bevor irgendwelche Arbeitsgänge ausgeführt werden, muß die Stromversorgung unterbrochen
Zur Reinigung der Gläser düfen keine Scheuer-bzw. Lösungsmittel verendet werden
Achten Sie darauf, daß die auf dem Beleuchtungskörper angegebene maximale Wattzahl nicht überschritten wird
Der Beleuchtungskörper darf nicht in feuchten Räumen bzw. im Freien eingesetzt werden
Den Beleuchtungskörper während dem Betrieb nicht abdecken

Leistung der Gluehbirne	56W-24Vdc
Anschluss	LED 2700K
Typ der Gluehbirne	
Geraet der Klasse	I
Schutzklasse	IP40

RU — ВНИМАНИЕ

ВНИМАНИЕ: БЕЗОПАСНОСТЬ ОСВЕТИТЕЛЬНОГО ПРИБОРА ГАРАНТИРОВАНА ТОЛЬКО ПРИ УСЛОВИИ ЕГО ЭКСПЛУАТАЦИИ В СООТВЕТСТВИИ С ПРИВЕДЕННЫМИ НИЖЕ ИНСТРУКЦИЯМИ, КОТОРЫЕ НЕОБХОДИМО СОХРАНИТЬ.

Перед выполнением любой операции с осветительным прибором отключить напряжение в сети
Рекомендуется никогда не чистить стекло при употребления абразивних веществ или Растворителей
Не превышать максимально допустимую мощность, указанную для данного осветительного прибора
Осветительный прибор не может быть использован во влажных помещениях или на улице
Никогда не накрывать осветительный прибор в рабочем режиме

Максимальная мощность лампочки	56W-24Vdc
Тип цоколя лампочки	LED 2700K
Тип лампочки	
Осветительный прибор КЛАССА	I
Класс защиты	IP40

F — AVERTISSEMENT

ATTENTION: LA SÉCURITÉ DE CET APPAREIL N'EST GARANTIE QUE SI L'ON RESPECTE LES INSTRUCTIONS SUIVANTES. IL EST, PAR CONSÉQUENT, INDISPENSABLE DE LES CONSERVER SOIGNEUSEMENT.

Avant d'effectuer toute opération, débrancher la tension de réseau
Ne jamais utiliser des abrasifs ou des solvents pour le nettoyage des parties en verre
Veiller à ne pas dépasser la limite maximale des watts indiquée sur l'appareil
Cet appareil ne peut pas être utilisé dans des pièces humides ni à l'extérieur
Ne jamais couvrir l'appareil pendant son fonctionnement

Puissance ampoule	56W-24Vdc
Culot	LED 2700K
Type ampoule	
Appareil de classe	I
Classe de protection	IP40

P — ADVERTÊNCIAS

ATENÇÃO: A SEGURANÇA DO APARELHO É GARANTIDA SOMENTE SE FOREM RESPEITADAS AS INSTRUÇÕES. PORTANTO, É NECESSÁRIO CONSERVÁ-LAS.

Antes de fazer qualquer tipo de operação, desligar a corrente eléctrica da rede
Para limpeza do vidro não usar materiais abrasivos ou solventes
Prestar atenção para não superar o número de watts indicados para o aparelho
O aparelho não pode ser utilizado em ambientes húmidos ou no exterior
Nunca cobrir o aparelho durante o funcionamento

Potência máxima da lâmpada	56W-24Vdc
Tipo de suporte da lâmpada	LED 2700K
Tipo de lâmpada	
Aparelho de CLASSE	I
Classe de protecção	IP40

E — ADVERTENCIAS

ATENCIÓN: LA SEGURIDAD DEL APARATO ESTÁ GARANTIZADA SÓLO POR UN USO ADECUADO DE LAS SIGUIENTES INSTRUCCIONES; POR CONSIGUIENTE, ES PRECISO CONSERVARLAS.

Antes de llevar a cabo cualquier tipo de operación, desconectar la tensión de la red
Para limpiar el cristal no utilize ningun abrasivo o solvente
Prestar atención a no superar el máximo de los vatios indicados en el aparato
El aparato no podrá utilizarse en ambientes húmedos ni en exteriores
No cubrir jamás el aparato durante el funcionamiento

Potencia máxima de la bombilla	56W-24Vdc
Casquillo de la bombilla	LED 2700K
Tipo de bombilla	
Aparato CLASE	I
Clase de protección	IP40

(I) - Procedere al montaggio seguendo le operazioni in ordine numerico progressivo.
(GB) - Proceed with assembling following the operations in progressive numerical order.
(D) - Arbeitsgänge in numerischer ordnung ausführen, um das gerät zu installieren.
(RU) - Производите установку в порядке увеличения обозначеных выше номеров.
(F) - **Il faut procèder a le montage exècutant les operatoins par l'ordre numerique progressif**.
(P) - Proceder a montagem segundo as istruçoes em ordem numerica progressiva.
(ES) - Proceder al montaje seguiendo las operaciones en orden numerico progresivo.

Fabbian

Rev.00 - 14.12.18

F45 G01-G02-G03-G04
F45 G05-G06-G07-G08

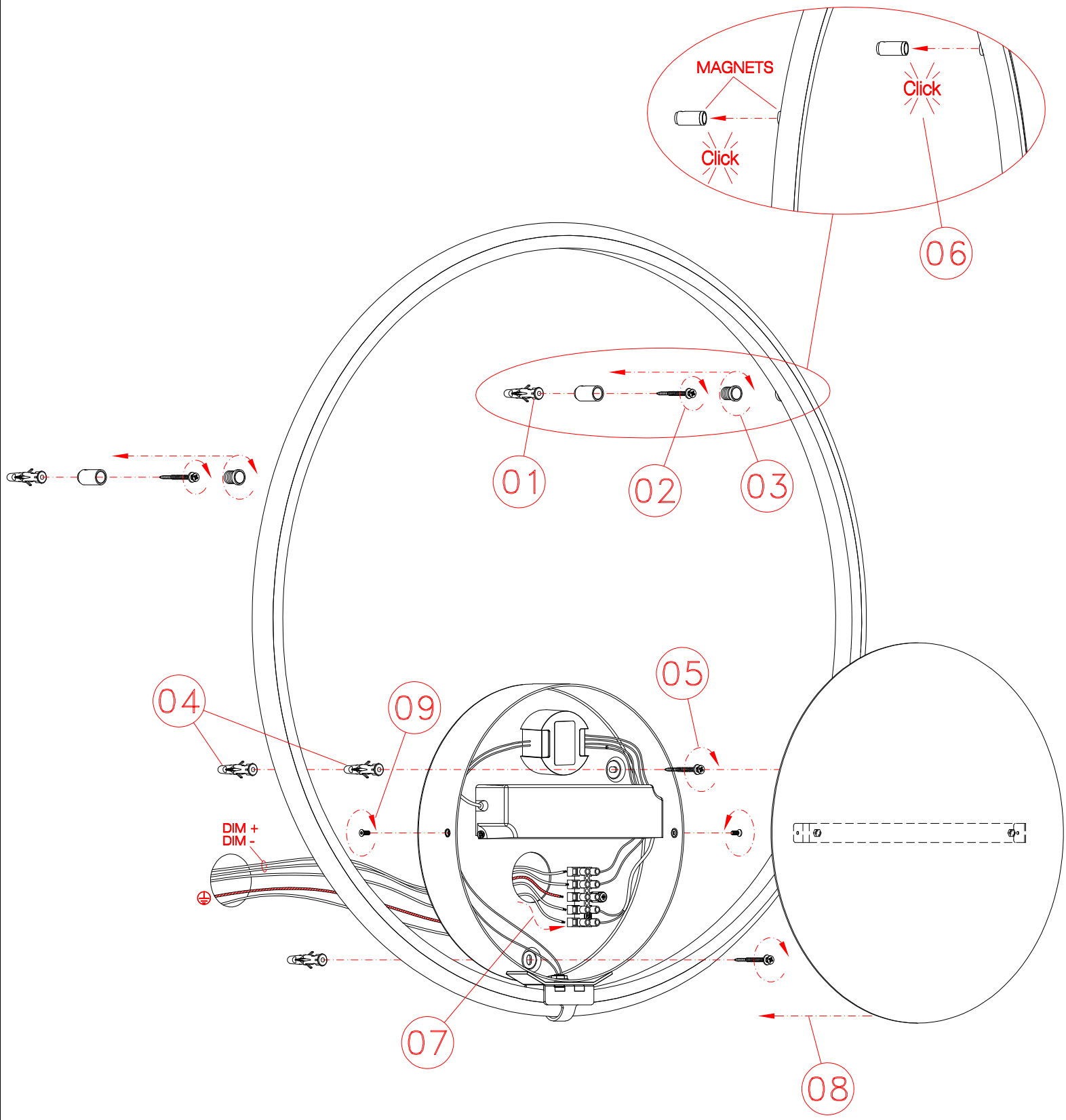

FEATURES

- BUS+FADER+DIMMER+DRIVER
- DC input: DC 12-24-48 Vdc or 12-24Vdc
- BUS Command:
  - DALI
  - DMX512+RDM
- MULTI INPUT – Analogic Automatic Detection of the Local Command:
  - Normally Open Push-Button
  - 0-10V
  - 1-10V
  - Potentiometer 10KOhm
- PUSH MENU' – Possibility to set:
  - Minimum value of dimming
  - Fade In
  - Fade Out
- Constant voltage variant to Common Anode applications
- Voltage outputs for R-L-C loads, DLM1248-1CV-DALI or DMX
- Voltage outputs for R loads, DLM1224-1CV-DALI or DMX
- Memory function
- Adjusting the brightness of White light or monochromatic color
- Adjusting the brightness up to completed off
- Soft start and soft stop
- Optimized output curve
- Typical efficiency > 95%
- 100% Functional test – 5 Years warranty

➢ CONSTANT VOLTAGE VARIANTS

Application: Dimmer

CODE	Input Voltage	Output	Channels	BUS Command	Analogic Auto Detection
DLM1248-1CV-DALI	12-48V DC	1 x 6,5A	1	DALI	N° 1 N.O. Push Button N° 1 analog signal 0-10V N° 1 analog signal 1-10V N° 1 potentiometer 10KOhm
DLM1224-1CV-DALI	12-24V DC	1 x 10A	1	DALI	
DLM1248-1CV-DMX	12-48V DC	1 x 6,5A	1	DMX	N° 1 N.O. Push Button N° 1 analog signal 0-10V N° 1 analog signal 1-10V N° 1 potentiometer 10KOhm
DLM1224-1CV-DMX	12-24V DC	1 x 10A	1	DMX	

The LED Dimmer is produced by default with:
- Analog Automatic Detection of local command set as N.O. Push Button
- Dimming minimum level at 1%

➢ PROTECTIONS

		DLM1248-1CV-DALI/DMX	DLM1224-1CV-DALI/DMX
OTP	Over temperature protection (*)	✓	
OVP	Over voltage protection (**)	✓	✓
UVP	Under voltage protection (**)	✓	✓
RVP	Reverse polarity protection (**)	✓	✓
IFP	Input fuse protection (**)	✓	✓
SCP	Short circuit protection	✓	
OCP	Open circuit protection	✓	✓
CLP	Current limit protection	✓	

(*) Thermal Protection on the output channel in case of high temperature. The thermal intervention is detected by transistor (> 150°C)
(**) Only control logic protection

➢ REFERENCE STANDARDS

EN 61347-1	Lamp controlgear - Part 1: General and safety requirements
EN 55015	Limits and methods of measurement of radio disturbance characteristics of electrical lighting and similar equipment
EN 61547	Equipment for general lighting purposes - EMC immunity requirements
IEC/EN 62386-101	Digital addressable lighting interface - Part 101: General requirements - System
IEC/EN 62386-102	Digital addressable lighting interface - Part 102: General requirements - Control gear
IEC/EN 62386-207	Digital addressable lighting interface - Part 207: Particular requirements for control gear - LED modules (device type 6)
IEC 60929-E.2.1	Control interface for controllable ballasts - control by d.c. voltage - functional specification
ANSI E 1.3	Entertainment Technology - Lighting Control Systems - 0 to 10V Analog Control Specification
ANSI E1.11	Entertainment Technology - USITT DMX512-A - Asynchronous Serial Digital Data Transmission Standard for Controlling Lighting Equipment and Accessories
ANSI E1.20	Entertainment Technology-RDM-Remote Device Management over USITT DMX512 Networks

➢ TECHNICAL SPECIFICATIONS

		DLM1248-1CV DALI or DMX Variant	DLM1224-1CV DALI or DMX Variant
		Constant voltage	Constant voltage
Supply voltage		min: 10,8 Vdc .. max: 52,8 Vdc	min: 10,8 Vdc .. max: 26,4 Vdc
Output voltage		= Vin	= Vin
Output current		6,5A @40°C [1]	10A @40°C [1]
Absorbed nominal power [1]	@12V	78 W	120 W
	@24V	156 W	240 W
	@48V	312 W	-
Power loss in stand by mode		<500mW	<500mW
Type of Load		R – L – C	R
Thermal shutdown [2]		150°C	-
D-PWM dimming frequency		300Hz	300Hz
D-PWM resolution		16 bit	16 bit
D-PWM range		0,1 – 100 %	0,1 – 100 %
Storage Temperature		min: -40 max: +60 °C	min: -40 max: +60 °C
Ambient Temperature [1]		min: -10 max: +40 °C	min: -10 max: +40 °C
Protection grade		IP20	IP20
Wiring		2.5mm² solid – 2.5mm² stranded - 30/12 AWG	1.5mm² solid - 1mm² stranded - 30/16 AWG
Wire preparation length		5.5 ÷ 6.5 mm	5 ÷ 6mm
Mechanical dimensions		44 x 57 x 25 mm	44 x 57 x 19 mm
Package dimensions		56 x 68 x 35 mm	56 x 68 x 35 mm
Casing material		Plastic	Plastic
Weight		43g	37g

[1] maximum value, dependent on the ventilation conditions. This value is measured at 40°C, it is maximum ambient temperature.
[2] The Temperature Protection, in case of high temperature, is detected by transistor (> 150°C) and is only on the output channel.

➢ installation

To set the product, follow the instruction on the picture below:

1) connect the LED in the output terminal blocks “OUT” of the device.
2) connect the LOCAL COMMAND to the terminal blocks “INPUT” and / or connect the BUS COMMAND to the terminal block “DALI or DMX” of the device.
3) connect the power supply (12-24 Vdc or 12-48Vdc depending on the dimmer model) to terminal blocks “DC IN” of the device.

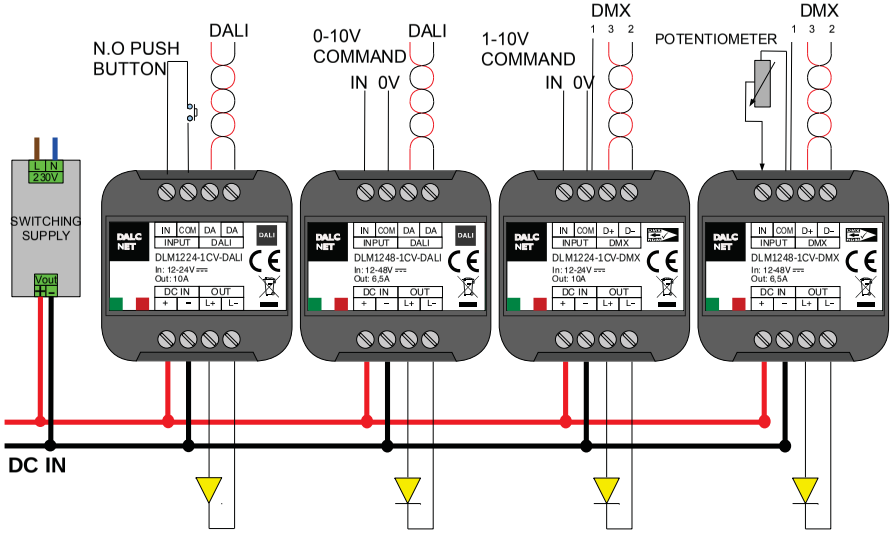

DLM LINE 1CV DALI

DLM LINE 1CV DMX

Examples of local commands and BUS command (DALI or DMX) connection.

➢ MECHANICAL DIMENSION

DLM1224 1CV BUS Variant

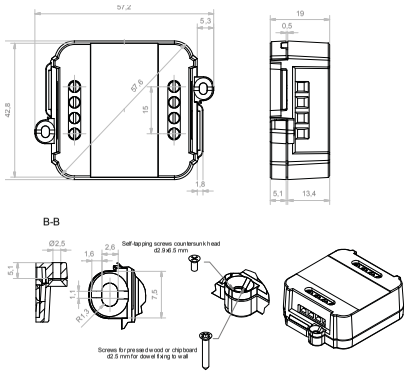

DLM1248 1CV BUS Variant

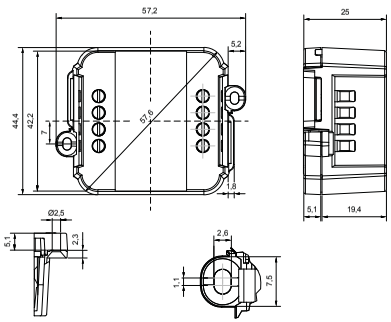

TECHNICAL NOTE

Installation:
• Installation and maintenance must be performed only by qualified personnel in compliance with current regulations.
• The product must be installed inside an electrical panel protected against overvoltages.
• The product must be installed in a vertical or horizontal position with the cover / label upwards or vertically; Other positions are not permitted. It is not permitted to bottom-up position (with the cover / label down).
• Keep separated the circuits at 230V (LV) and the circuits not SELV from circuits to low voltage (SELV) and from any connection with this product. It is absolutely forbidden to connect, for any reason whatsoever, directly or indirectly, the 230V mains voltage to the bus or to other parts of the circuit.

Power Supply:
• For the power supply use only a SELV power supplies with limited current, short circuit protection and the power must be dimensioned correctly.
In case of using power supply with ground terminals, all points of the protective earth (PE = Protection Earth) must be connected to a valid and certified protection earth.
• The connection cables between the power source "low voltage" and the product must be dimensioned correctly and they should be isolated from every wiring or parts at voltage not SELV. Use double insulated cables.
• Dimension the power supply for the load connected to the device. If the power supply is oversized compared with the maximum absorbed current, insert a protection against over-current between the power supply and the device.

Command:
• The length of the connection cables between the local commands (N.O. Push button, 0-10 V, 1-10 V, Potentiometer or other) and the product must be less than 10m; the cables must be dimensioned correctly and they should be isolated from every wiring or parts at voltage not SELV. It is suggested to use double insulated shielded and twisted cables.
• The length and type of the connection cables at the BUS (DMX512, DALI or other) use cables as per specification of the respective protocols and regulations and they should be isolated from every wiring or parts at voltage not SELV. It is suggested to use double insulated shielded and twisted cables.
• All the product and the control signal connect at the bus (DMX512, DALI, Ethernet, or other) and at the local command (N.O. Push Button, 0-10V, 1-10V, Potentiometer or other) must be SELV (the devices connected must be SELV or supply a SELV signal)

Outputs:
• The length of the connection cables between the product and the LED module must be less than 10m; the cables must be dimensioned correctly and they should be isolated from every wiring or parts at voltage not SELV. It is suggested to use double insulated shielded and twisted cables.